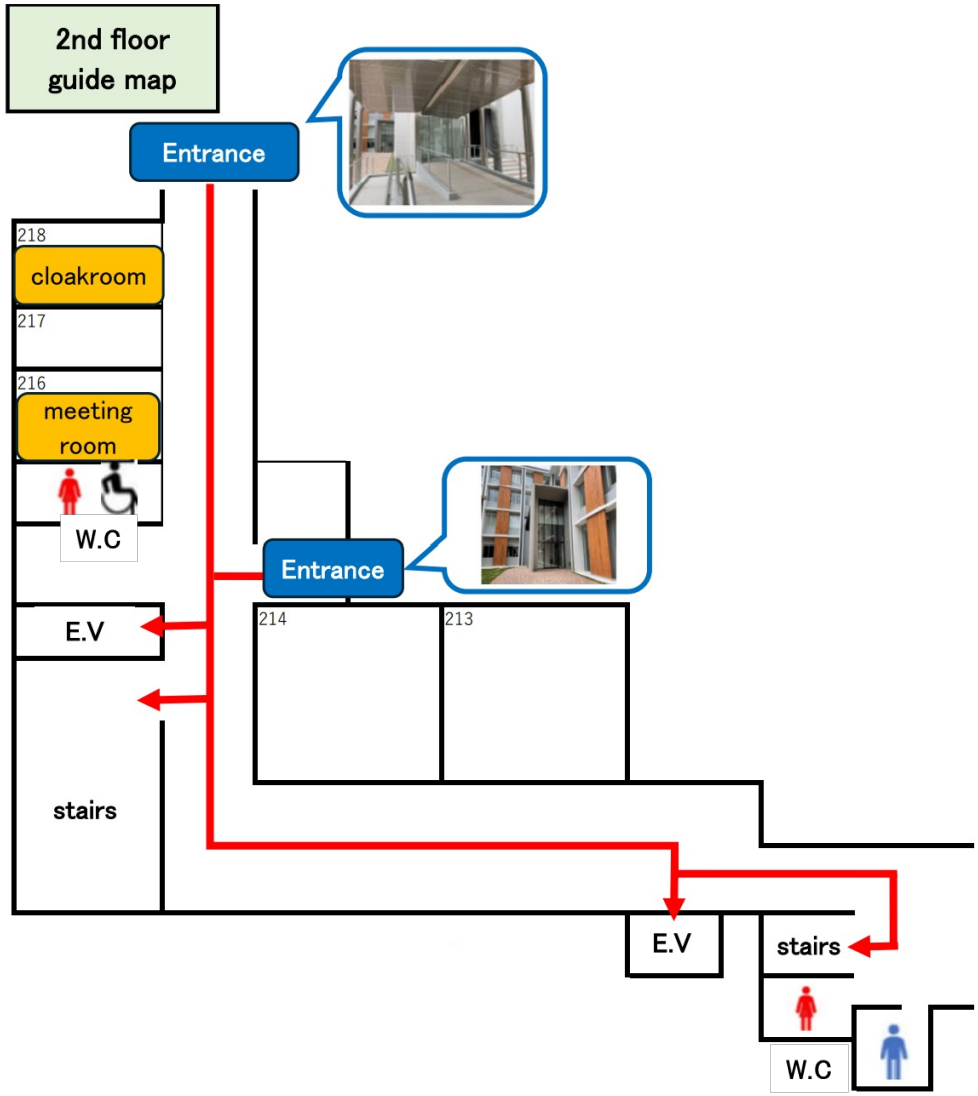
2nd floor
guide map
Entrance
218
cloakroom
217
216
meeting
room
W.C
Entrance
E.V
214
213
stairs
E.V
stairs
W.C

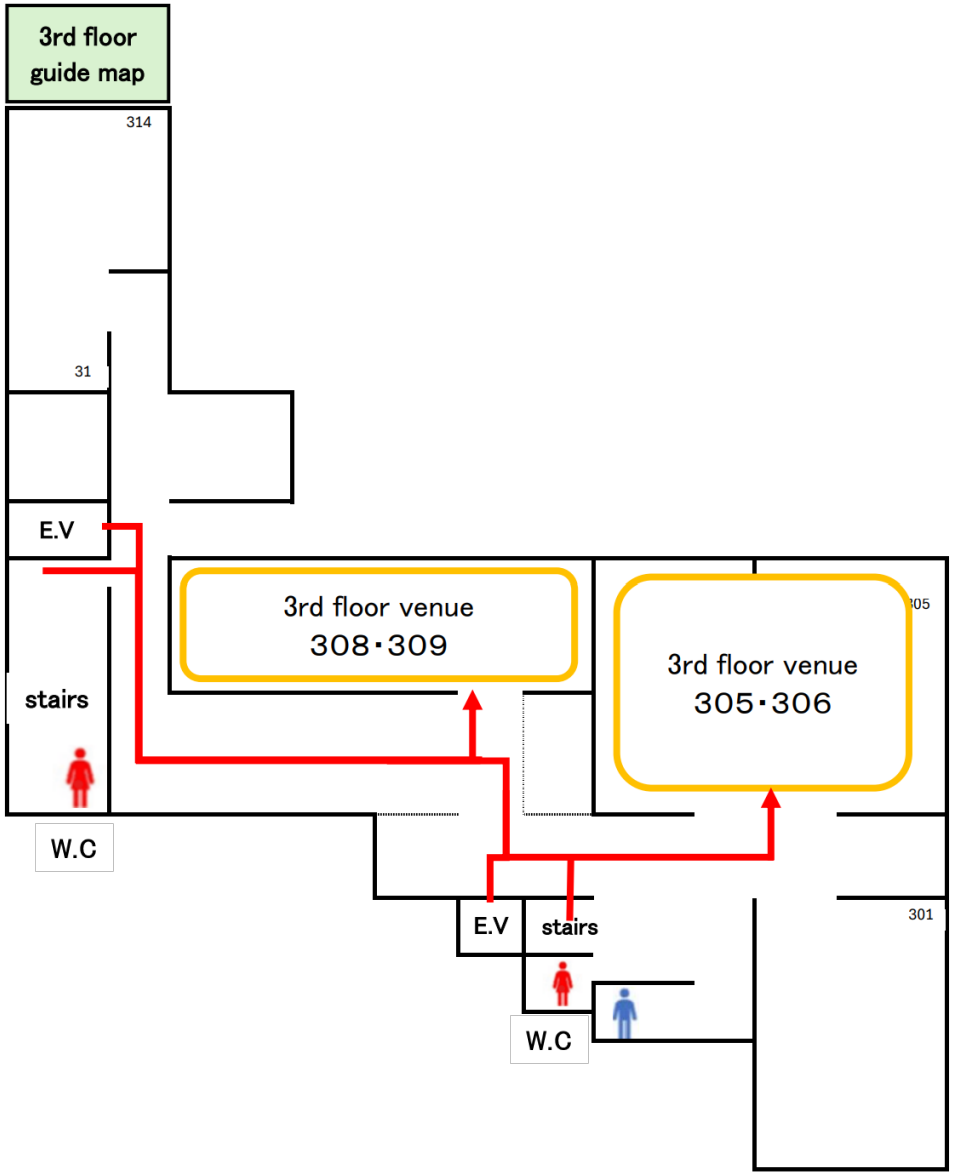
3rd floor
guide map
314
31
E.V
stairs
W.C
3rd floor venue
308·309
3rd floor venue
305·306
305
E.V
stairs
W.C
301

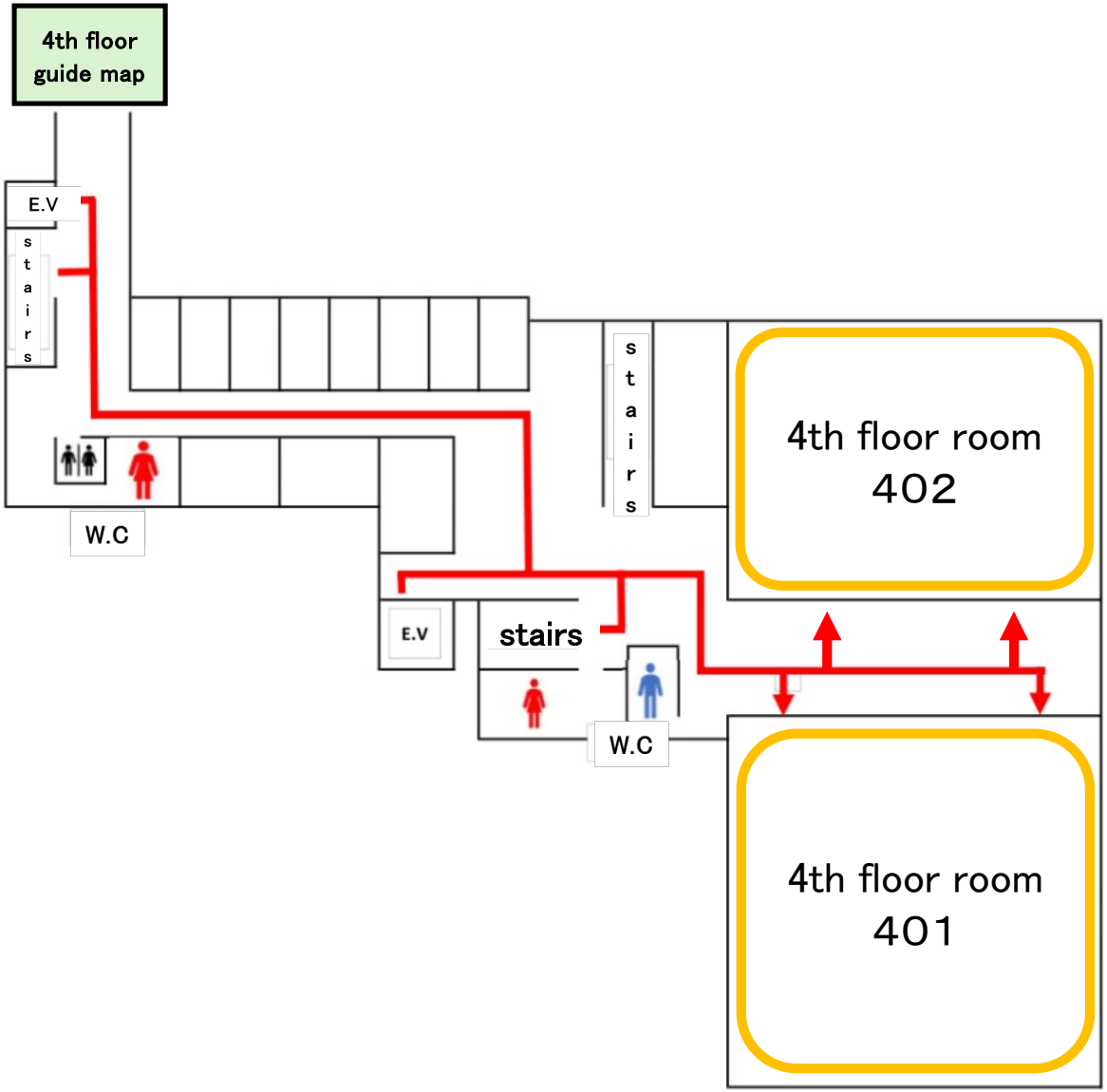
4th floor
guide map
E.V
stairs
W.C
stairs
4th floor room
402
E.V
stairs
W.C
4th floor room
401